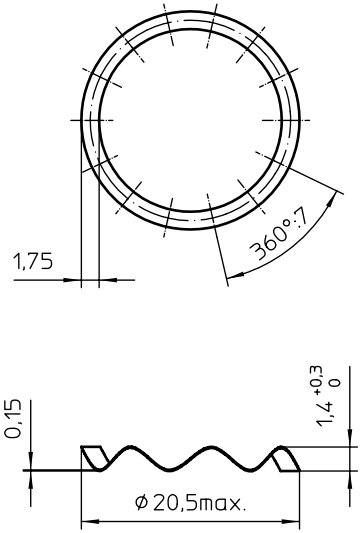

Material: CrNi steel.

CLASS.NO. 97-01-31	SPR-P22/13	4322 021 30651	90-10-08 / ~~95-08-07~~ / 97-01-31
NAME NAAM: M Veekens	SUPERS. VERV.	1 SHEET BLADI 112 – 001	010	A4
MPA	CHECK CONTR.	DAT. 90-10-08	Property of Eigendom van	© FERROXCUBE 2000